H.C.B-A1763 FORD PETROL ENGINE TIMING TOOL KIT (1.0 ECOBOOST)

* Contain tools vital for setting and locking the engine and for setting the position of the variable cam timing units.

Rating: Not Rated Yet
Price:

Sales price:

Discount:

Ask a question about this product

Manufacturer: HCB Specialty Tools

Description

Product Description:

HCB FORD PETROL ENGINE TIMING TOOL KIT (1.0 ECOBOOST)

Product UOM

Manufacturer No. :
H-C-B-A1763

Country of Origin :
Taiwan

Brand
HCB

Product Specifications (Features)

* Contain tools vital for setting and locking the engine and for setting
the position of the variable cam timing units.

* Application:

Focus II,Mk2,C,S,MK2, Kuga,Sport, Fiesta, Fiesta, Grand C-MAX

Engine: 1.0 EcoBoost, 1.6 SCT EcoBoost

Engine codes: M1JA, M1JB, M1DA, M8DA, M1JC, M1JD, P4JA, P4JB, P3DB

Bolded

1.0 EcoBoost M1JA 2010-2014

1.0 EcoBoost M1JB 2010-2014

Cabled

1.0 EcoBoost M8DA 2012-2014

1.0 EcoBoost M8DA 2012-2014

Kuga/Sport

1.0 EcoBoost M1JC 2012-2014

1.0 EcoBoost M1JC 2012-2014

Fiesta

1.0 EcoBoost M1JD 2012-2014

1.0 EcoBoost M1JD 2012-2014

1.0 EcoBoost P4JA 2012-2014

1.0 EcoBoost P4JA 2012-2014

1.0 EcoBoost P4JB 2012-2014

1.0 EcoBoost P4JB 2012-2014

Focus

1.0 SCT EcoBoost M8DA 2012-2014

1.0 SCT EcoBoost M8DA 2012-2014

Grand C-MAX

1.0 EcoBoost M8DA 2012-2014

1.0 EcoBoost M8DA 2012-2014

* Tool OEM no. : 303-1369(T), 303-1425(B), 303-1426, 303-1428, 303-730, 303-1450

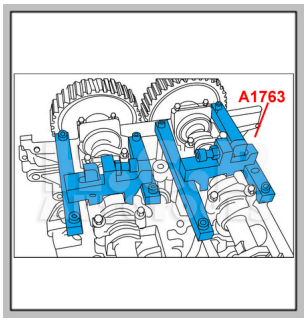
A1763