H.C.B-A1809 BMW (N20) BALANCE SHAFTS ADJUSTER

* For fixing the balancer shaft and holding chain sprocket for removing/ installing the oil pump or chain for sprocket repair.

Rating: Not Rated Yet
Price:

Sales price:

Discount:

Ask a question about this product

Manufacturer: HCB Specialty Tools

Description

Product Description:

NEW **BMW** [body] BALANCE SHAFTS ADJUSTER

Product SKU:

Manufacturer No.:

H.C.B.-A1809

Country of Origin:
Taiwan
Brand:
H.C.B
Product Specifications (Features):

* For fixing the balancer shaft and holding chain sprocket for removing/ installing the oil pump or chain for sprocket repair.

* This Set Included 2 screws PH8 M8 x 1.25mm Allen screw 60 [length: 26 mm]

* Application: **BMW N20**
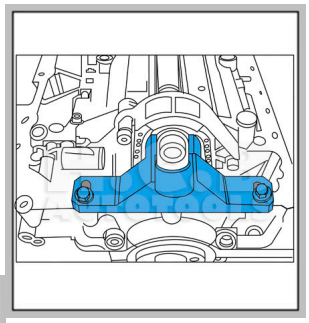
* **BMW OEM no.: ref.: 00 10 2 330 117 00 00 2 410 670**