# H.C.B-A1846 BMW (S63TU) VALVE PRESSURE SPRING REMOVER/ INSTALLER

* This tool is used to compress the valve spring for quick and safe removal/ installation of the valve spring.

Rating: Not Rated Yet
**Price:**

Sales price:

Discount:

Ask a question about this product

Manufacturer: HCB Specialty Tools

Description

Product Description:

NEW BMW (S63TU) VALVE PRESSURE SPRING REMOVER/ INSTALLER

Product info:

Model No.:
H.C.B-A1846

Country of Origin:
Taiwan
Brand:
HCB
Product Specifications (Features):

* This tool is used to compress the valve spring for quick and safe removal/ installation of the valve spring.

* Application: BMW S63TU engine
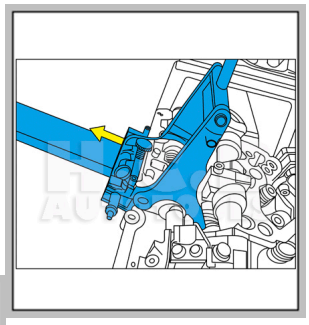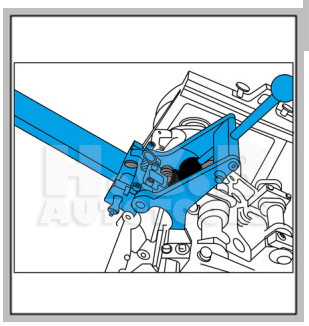
* BMW OEM No.: 11 - 2 - 330 - 000