H.C.B-A1925 VAG OIL SEAL PULLER (2 PCS)

* Used when replacing crankshaft oil seal on timing chain end.

Rating: Not Rated Yet
Price:

Sales price:

Discount:

Ask a question about this product

Manufacturer: HCB Specialty Tools

Description

Product Description :

VAG OIL SEAL PULLER (2 PCS)

Product UNIT

Manufacturer No. :

H.C.B.-A1925

Country of Origin :
Taiwan
Brand :
H.C.B.
Product Specifications /Features :

* Used when replacing crankshaft oil seal on timing chain end.

* Used to pry out sealing ring in power steering pump drive, also suitable for some power steering seals
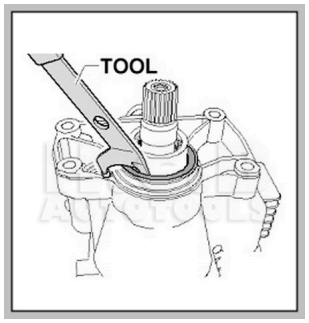
* VW-0008 Ins.ref.: T10540 (T10540Brand T0K1408)