H.C.B-B1867 BMW (N47/ N47S) CRANKSHAFT REAR OIL SEAL INSTALLATION TOOL KIT

* For replacing the crankshaft rear seal.

Rating: Not Rated Yet
Price:

Sales price:

Discount:

Ask a question about this product

Manufacturer: HCB Specialty Tools

Description

Product Description:

NEW

BMW (N47/N47S) CRANKSHAFT REAR OIL SEAL INSTALLATION TOOL KIT

Product info

Manufacturer:
HCB-BMW

Country of Origin:
Taiwan
Brand :
HCB

Product Specifications /Features:

* For replacing the crankshaft rear seal

* Application: BMW N47/ N47S

* BMW 116i/ 118i, 1.6L, 2009- 2013 E11

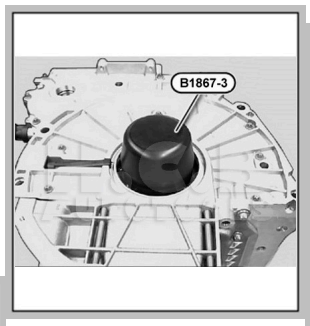
B1867-3

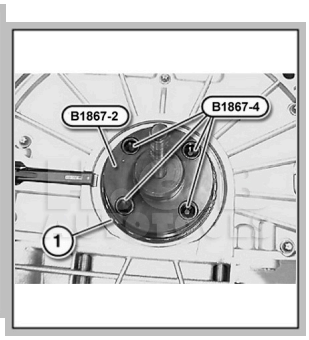
B1867-2
B1867-4
1