H.C.B-IV1001 IVECO CRANKSHAFT FRONT OIL SEAL REMOVAL TOOL

* Tool to remove crankshaft front gasket.

Rating: Not Rated Yet
Price:

Sales price:

Discount:

Ask a question about this product

Manufacturer: HCB Specialty Tools

Description

Product Description:-

NEW! IVECO CRANKSHAFT FRONT OIL SEAL REMOVAL TOOL

Product info

Identical to:-

H.C.B.-IV1001

Country of origin:-

Taiwan

Material:-

Steel

Product Specifications /Features:-

* Tool to remove crankshaft front gasket.

* Application: IVECO CNG ENGINES (TURBO LIFT CAMEQUIPE S)

* Material: Steel. *

* IVECO OEM no.:-IC 1000000
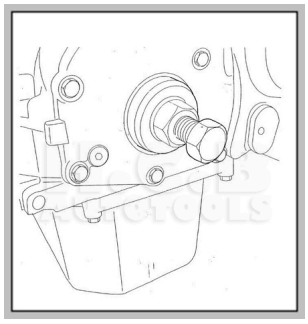
* CNG OEM no.:-IC 1000000